MAX14827 Evaluation Kit

Evaluates: MAX14827
MAX14827A

General Description

The MAX14827 evaluation kit (EV kit) consists of a MAX14827 evaluation board is a fully assembled and tested circuit board that evaluates the MAX14827 IO-Link® device transceiver.

The EV kit is designed to operate as a stand-alone board or with an mbed® board for easy software evaluation.

The MAX14827 EV kit can also be used to evaluate the MAX14827A.

Features

- IO-Link-Compliant Device Transceiver
- IO and SPI Interface Terminals
- Proven PCB Layout
- Fully Assembled and Tested

***Ordering Information** appears at end of data sheet.*

Quick Start

Recommended Equipment

- MAX14827 EV kit
- 24V, 500mA DC power supply
- Function generator or logic signal generator
- Oscilloscope

Procedure

The EV kit is fully assembled and tested. Follow the steps below to verify board operation before exercising the full features of the device:

1) Verify that all the jumpers are in their default positions, as shown in Table 1. Ensure that SW1 is to the left (using the internal 5V LDO).
2) Connect the 24V DC power supply on the VCC and GND connectors of the EV kit board.
3) Set the function generator to generate a 0–3V 1kHz square wave. Connect the function generator between the TX and GND test points on the EV kit.
4) Connect the oscilloscope to the C/Q test point.
5) Turn on the power supply.
6) Turn on the function generator.
7) Verify that the C/Q output switches as expected.

IO-Link is a registered trademark of ifm electronic GmbH.
mbed is a registered trademark of ARM Limited.

19-8251; Rev 1; 7/16

maxim integrated™

Detailed Description of Hardware

The MAX14827 EV kit provides a proven layout for the MAX14827 IO-Link device transceiver.

All the power-supply and regulator input and output pins are connected to convenient connectors for easy probing. The device logic input and output pins are also provided with convenient connectors for logic testing.

The transceiver's C/Q, and DO pins are protected by TVS diodes.

See Table 1 for a description of all the EV kit jumper configurations.

Regulators

The device includes two internal regulators to generate 5V (V5) and 3.3V (V33). Use the switch (SW1) to set the configuration for the V5 regulator.

Set switch SW1 to position 1 (far left) to generate 5V using the internal regulator. In this configuration, the V5 regulator is capable of driving external loads up to 30mA total external load current.

Set SW1 to position 2 (middle) to configure V5 as an input. When the internal 5V regulator is not used, V5 becomes the supply input for the internal analog and digital functions and must be supplied externally so that the device operates normally. Connect an external 5V supply to the V5 test point when SW1 is in position 2. 5V must be present on V5 for normal operation.

To drive larger loads, an external pass transistor can be used to generate the required 5V. For this mode of operation, set SW1 to position 3 (far right). This switch setting connects REG to the base of the transistor to regulate the voltage and connects V5 to the emitter.

Use jumper J4 to set the logic supply voltage. Connect J4 to 1-2 to set VL = V5 (5V). Connect J4 to 2-3 to set VL = V33 (3.3V).

Mode Selection (Pin-Mode or SPI Mode)

The MAX14827 operates with either pin-mode control or via an SPI interface.

The mode-selection switch (SW2) sets the mode of operation. Set SW2 to the on position to operate the MAX14827 in SPI mode. Set SW2 to off (left) to operate the board in pin-mode.

SW2 can be toggled after power-up.

Pin-Mode

To operate the device in pin-mode, set the mode-selection switch, SW2, to the off position (left). In pin-mode, J5, J6, and J7 are used to configure the C/Q and DO drivers.

SPI Mode

The EV kit was designed to operate with an mbed board for fast and easy prototyping. To operate the EV kit in SPI mode, connect the board to the Arduino-headers on the mbed board and set the mode-selection switch, SW2, to the on position. Remove the shunts from all of the jumpers except J4.

Evaluating the MAX14827 in Pin-Mode

Configuring the Drivers (C/Q, DO)

C/Q and DO are both configured by setting the J5, J6, and J7 jumpers in pin-mode. See Table 2.

Set J5 to 1-2 (SDI/TX/NPN is high) to set the C/Q and DO drivers in NPN mode. Set J6 to 1-2 ($\overline{CS}$/PP is high) to set C/Q and DO to push-pull mode. C/Q and DO operate in PNP mode when J5 and J6 are both set to 2-3 (SDI/TX/NPN and $\overline{CS}$/PP are low).

The C/Q driver is enabled/disabled by setting the TXEN input. Set J8 to 1-2 (TXEN is high) to enable the C/Q driver. Apply a signal at the TX input (TP19) to set the C/Q output. C/Q is an input when J8 is 2-3 (TXEN is low).

DO cannot be disabled in Pin mode. Apply a signal at the LO input (TP15) to set the DO output.

Setting the Driver Current (C/Q, DO)

Driver current limit for the C/Q and DO outputs is selectable in pin-mode using the CLK/TXEN/200MA input. Set J7 to 2-3 to set the driver current limit to 100mA (typ). Set J7 to 1-2 to set the driver current limit to 200mA (typ).

LED Driver (LED1IN)

Close J1 to pull the LED1IN input high and turn on LED1. LED1IN is low and LED1 is off when J1 is open.

Evaluating the MAX14827 in SPI Mode

The EV kit was designed to operate with an mbed board for fast and easy prototyping. To operate the EV kit in SPI mode connect the MAX14827 EV kit to the Aurdino-headers on the mbed board and configure the board for SPI operation. See the *Evaluating the MAX14827 with mbed Quick Start Guide* for more details.

Table 1. Jumper Descriptions

JUMPER	SHUNT POSITON	DESCRIPTION
J1	Closed	LED1IN is high. LED1 is on.
	Open*	LED1IN is low. LED1 is off.
J2	Closed	UARTSEL is high
	Open*	UARTSEL is low
J3	Closed	LED2 is bypassed. $\overline{IRQ}$ is pulled to VL
	Open*	$\overline{IRQ}$ is pulled to VL through LED2. LED2 turns on when $\overline{IRQ}$ is low.
J4	1-2	VL is connected to V5
	2-3*	VL is connected to V33
J5	1-2	SDI/TX/NPN is high
	2-3*	SDI/TX/NPN is low
J6	1-2	$\overline{CS}$/PP is high
	2-3*	$\overline{CS}$/PP is low
J7	1-2	CLK/TXEN/200MA is high
	2-3*	CLK/TXEN/200MA is low
J8	1-2	TXEN is high. C/Q driver is enabled
	2-3*	TXEN is low. C/Q driver is disabled

**Default position.*

Table 2. Configuring and Setting C/Q and DO

SPI/$\overline{PIN}$	TXEN	TX or LO	CQ_Dis or DO_Dis	CQ_Q or DO_Q	NPN MODE		PNP MODE		PP MODE	
					C/Q	DO	C/Q	DO	C/Q	DO
L	L	L	—	—	Z	Z	Z	H	Z	H
		H	—	—	Z	L	Z	Z	Z	L
	H	L	—	—	Z	Z	H	H	H	H
		H	—	—	L	L	Z	Z	L	L
H	L	L	0	0	Z	Z	Z	H	Z	H
		L	0	1	Z	Z	H	H	H	H
		H	0	0	Z	L	Z	Z	Z	L
		H	0	1	Z	Z	H	H	H	H
	H	L	0	0	Z	Z	H	H	H	H
		L	0	1	Z	Z	H	H	H	H
		H	0	0	L	L	Z	Z	L	L
		H	0	1	Z	Z	H	H	H	H
	X	X	1	X	Z	Z	Z	Z	Z	Z

Component Information, PCB Layout, and Schematic

See the following links for component information, PCB layout diagrams, and schematic.

- **MAX14827 EV BOM**
- **MAX14827 EV PCB Layout**
- **MAX14827 EV Schematic**

Ordering Information

PART	TYPE
MAX14827EVKIT#	EV Kit

#Denotes RoHS compliant.

Revision History

REVISION NUMBER	REVISION DATE	DESCRIPTION	PAGES CHANGED
0	12/15	Initial release	—
1	7/16	Added MAX14827A	1–5

For pricing, delivery, and ordering information, please contact Maxim Direct at 1-888-629-4642, or visit Maxim Integrated's website at www.maximintegrated.com.

Maxim Integrated cannot assume responsibility for use of any circuitry other than circuitry entirely embodied in a Maxim Integrated product. No circuit patent licenses are implied. Maxim Integrated reserves the right to change the circuitry and specifications without notice at any time.

Maxim Integrated and the Maxim Integrated logo are trademarks of Maxim Integrated Products, Inc. © 2016 Maxim Integrated Products, Inc.

TITLE: Bill of Materials						
DATE: 07/17/2015						
DESIGN: max14827_evkit_a						
ITEM	REF_DES	QTY	MFG PART #	MANUFACTURER	VALUE	DESCRIPTION
1	C1, C2	2	C0603C105K4RAC; GRM188R71C105KA12; C1608X7R1C105K; EMK107B7105KA	KEMET/MURATA/TDK /TAIYO YUDEN	1UF	CAPACITOR; SMT (0603); CERAMIC CHIP; 1UF; 16V; TOL=10%; MODEL=; TG=-55 DEGC TO +125 DEGC; TC=X7R
2	C3, C4	2	GRM188R72A104KA35	MURATA	0.1UF	CAPACITOR; SMT (0603); CERAMIC CHIP; 0.1UF; 100V; TOL=10%; TG=-55 DEGC TO +125 DEGC; TC=X7R
3	D1, D8	2	SPT02-236DDB	ST MICROELECTRONICS	SPT02-236DDB	DIODE; TVS; UQFN-2L; PIV=38V; IF=0.3A
4	D2	1	SPT01-335DEE	ST MICROELECTRONICS	SPT01-335DEE	DIODE; TVS; QFN6; PIV=38V; IF=0.3A
5	D3, D4, D6, D7, D9	5	SMBJ33A	ST MICROELECTRONICS	33V	DIODE; TVS; SMB (DO-214AA); VRM=33V; IPP=11.8A
6	D5	1	ZHCS506TA	DIODES INCORPORATED	ZHCS506TA	DIODE; SCH; SMT (SOT-23); PIV=60V; IF=0.5A
7	J1-J3	3	PCC02SAAN	SULLINS	PCC02SAAN	CONNECTOR; MALE; THROUGH HOLE; BREAKAWAY; STRAIGHT THROUGH; 2PINS; -65 DEGC TO +125 DEGC
8	J4-J8	5	PCC03SAAN	SULLINS	PCC03SAAN	CONNECTOR; MALE; THROUGH HOLE; BREAKAWAY; STRAIGHT THROUGH; 3PINS; -65 DEGC TO +125 DEGC
9	LED1	1	LTST-C193KGKT-5A	LITE-ON ELECTRONICS; INC.	LTST-C193KGKT-5A	DIODE; LED; STANDARD; YELLOW-GREEN; SMT (0603); PIV=1.9V; IF=0.005A; -55 DEGC TO +85 DEGC

10	LED2	1	LTST-C193KRKT-2A	LITE-ON ELECTRONICS; INC.	LTST-C193KRKT-2A	DIODE; LED; STANDARD; RED; SMT (0603); PIV=2.2V; IF=0.002A; -55 DEGC TO +85 DEGC
11	P1	1	SSQ-110-23-G-S	SAMTEC	SSQ-110-23-G-S	CONNECTOR; FEMALE; THROUGH HOLE; SSQ SERIES; STRAIGHT; 10PINS
12	P2, P3	2	SSQ-108-23-G-S	SAMTEC	SSQ-108-23-G-S	CONNECTOR; FEMALE; THROUGH HOLE; SSQ SERIES; STRAIGHT; 8PINS
13	P4	1	SSQ-106-03-T-S	SAMTEC	SSQ-106-03-T-S	CONNECTOR; FEMALE; THROUGH HOLE; SSQ SERIES; STRAIGHT; 6PINS
14	Q1	1	BCP56TA	DIODES INCORPORATED	BCP56TA	TRAN; NPN SILICON PLANAR MEDUIM POWER TRANSISTOR; NPN; SOT-223 ; PD-(2.0W); I-(1A); V-(80V)
15	R1, R2, R4, R7, R8	5	CR0603-FX-1001ELF	BOURNS	1K	RESISTOR; 0603; 1K OHM; 1%; 100PPM; 0.10W; THICK FILM
16	R3, R5, R12, R15-R17	6	CRCW060310K0FK; 9C06031A1002FK; ERJ-3EKF1002	VISHAY DALE/YAGEO PHICOMP/PANASONIC	10K	RESISTOR; 0603; 10K; 1%; 100PPM; 0.10W; THICK FILM
17	R6	1	CRCW0603500RFK	VISHAY DALE	500	RESISTOR, 0603, 500 OHM, 1%, 100PPM, 0.10W, THICK FILM
18	R9-R11	3	CRCW0603100RFK; ERJ-3EKF1000	VISHAY DALE/PANASONIC	100	RESISTOR; 0603; 100 OHM; 1%; 100PPM; 0.10W; THICK FILM
19	R13, R14	0	N/A	?	DNI	DO NOT INSTALL, RESISTOR; 0603; 0 OHM; 0%; JUMPER; 0.10W; THICK FILM; FORMFACTOR
20	R18	1	N/A	?	10K	RESISTOR; 0402; 10K; 1%; 100PPM; 1/16W; THICK FILM; FORMFACTOR
21	SU1-SU7	7	STC02SYAN	SULLINS ELECTRONICS CORP.	STC02SYAN	TEST POINT; JUMPER; STR; TOTAL LENGTH=0.256IN; BLACK; INSULATION=PBT CONTACT=PHOSPHOR BRONZE; COPPER PLATED TIN OVERALL

22	SW1	1	MHS231	COPAL ELECTRONICS INC	MHS231	SWITCH; DP3T; THROUGH HOLE; STRAIGHT; 12V; 0.2A; MHS SERIES; HYPER-MINIATURE SLIDE SWITCH; RCOIL=0 OHM; RINSULATION=100M OHM
23	SW2	1	A6T-1104	OMRON	A6T-1104	SWITCH; SPST; THROUGH HOLE; STRAIGHT; 24V; 0.025A; A6T DIP SWITCH; SLIDE TYPE; WIDE ASSORTMENT OF POLE CONFIGURATIONS; RCOIL=0.2 OHM; RINSULATION=100M OHM; OMRON
24	TP1, TP3-TP5	4	5010	KEYSTONE	N/A	TEST POINT; PIN DIA=0.125IN; TOTAL LENGTH=0.445IN; BOARD HOLE=0.063IN; RED; PHOSPHOR BRONZE WIRE SILVER PLATE FINISH; RECOMMENDED FOR BOARD THICKNESS=0.062IN; NOT FOR COLD TEST
25	TP2, TP12, TP18, TP24, TP26	5	5011	KEYSTONE	N/A	TEST POINT; PIN DIA=0.125IN; TOTAL LENGTH=0.445IN; BOARD HOLE=0.063IN; BLACK; PHOSPHOR BRONZE WIRE SILVER PLATE FINISH; RECOMMENDED FOR BOARD THICKNESS=0.062IN; NOT FOR COLD TEST
26	TP6-TP11, TP13-TP17, TP19-TP23	16	5014	KEYSTONE	N/A	TEST POINT; PIN DIA=0.125IN; TOTAL LENGTH=0.445IN; BOARD HOLE=0.063IN; YELLOW; PHOSPHOR BRONZE WIRE SILVER PLATE FINISH;
25	U1	1	MAX14827ATG+	MAXIM	MAX14827ATG+	IC; TXRX; IO-LINK DEVICE TRANSCEIVER; TQFN24-EP 4X4
TOTAL		81				

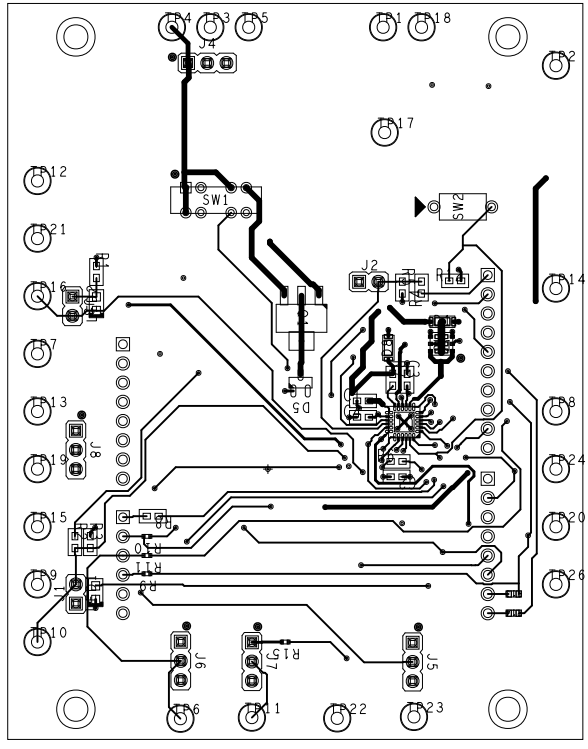
TP4
TP3
TP5
TP1
TP18
TP2
J4
TP17
TP12
SW1
SW2
TP21
J2
TP16
TP14
TP7
D5
TP13
TP8
J8
TP19
TP24
TP15
TP20
TP9
TP26
TP10
J6
J7
J5
TP6
TP11
TP22
TP23

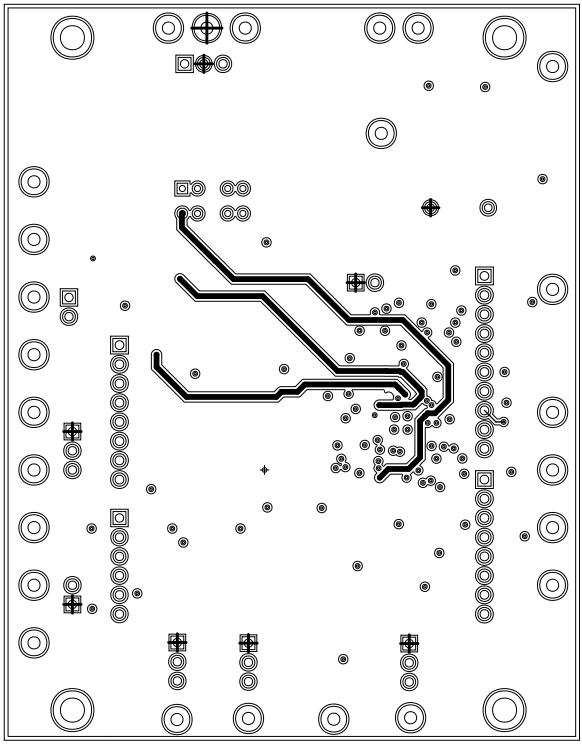

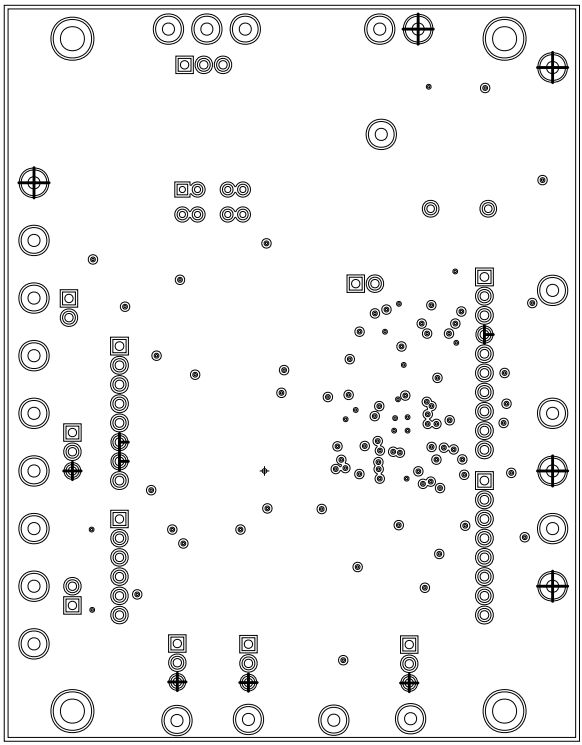

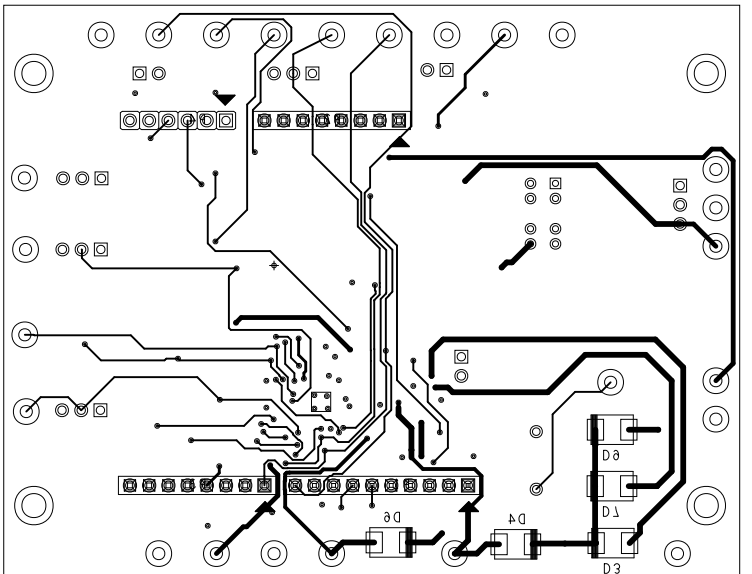
D8
D7
D6
D4
D3

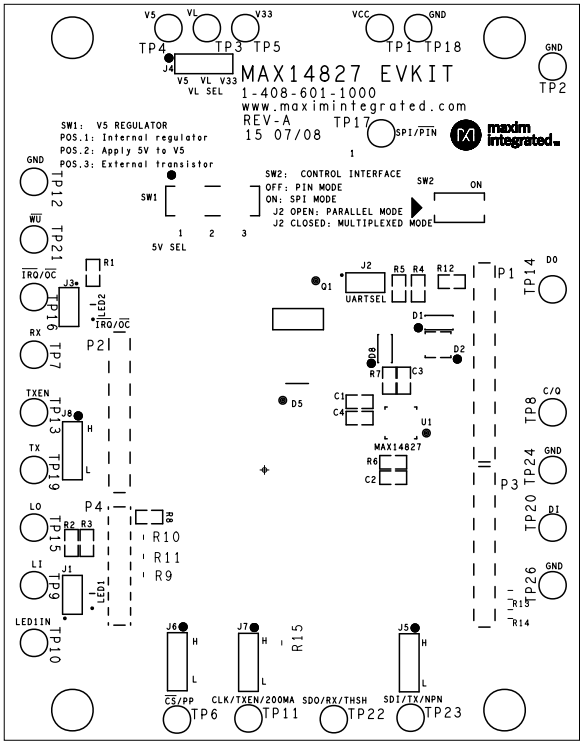

MAX14827 EVKIT
1-408-601-1000
www.maximintegrated.com
REV-A
15 07/08
SW1: V5 REGULATOR
POS.1: Internal regulator
POS.2: Apply 5V to V5
POS.3: External transistor
SW2: CONTROL INTERFACE
OFF: PIN MODE
ON: SPI MODE
J2 OPEN: PARALLEL MODE
J2 CLOSED: MULTIPLEXED MODE
5V SEL
VL SEL
UARTSEL
MAX14827
V5
VL
V33
VCC
GND
TP4
TP3
TP5
TP1
TP18
TP2
TP17
SPI/PIN
TP12
TP21
TP16
TP7
TP13
TP19
TP15
TP9
TP10
TP14
TP8
TP24
TP20
TP26
TP6
TP11
TP22
TP23
CS/PP
CLK/TXEN/200MA
SDO/RX/THSH
SDI/TX/NPN

TP1
TP2
TP3
TP4
TP5
TP6
TP7
TP8
TP9
TP10
TP11
TP12
TP13
TP14
TP15
TP16
TP17
TP18
TP19
TP20
TP21
TP22
TP23
TP24
TP25
TP26
D1
D2
D3
D4
D8
SW1
b1
b2
b3
b4

SW1 IS DP3T: ON-ON-ON
POSITION 1: 3-1, 7-5
POSITION 2: OPEN
POSITION 3: 3-4, 7-8

J4 PCC03SAAN
J1 PCC02SAAN
J2 PCC02SAAN
J8 PCC03SAAN
J3 PCC02SAAN
J7 PCC03SAAN
J6 PCC03SAAN
J5 PCC03SAAN

C4 0.1UF
C1 1UF
C2 1UF
C3 0.1UF

U1 MAX14827ATG+
SW1 MHS231
Q1 BCP56TA
D5 ZHCS506TA
LED1 LTST-C193KGKT-5A
LED2 LTST-C193KGKT-5A

R1 1K
R2 1K
R3 10K
R4 1K
R5 10K
R6 500
R7 1K
R18 10K

LED_MICRO
LED1IN
SPI/PIN
CSB/PP
SDI/TX/NPN
CLK/TXEN/200MA
TX
TXEN
UARTSEL_MICRO
LO
DI
IRQB/OCB
SDO/RX/THSH
RX
WUB
DO
LI
VE

TP1 TP2 TP12 TP18 TP24 TP26
TP3 TP4 TP5
TP6 CSB/PP
TP7 RX
TP8 C/Q
TP9 LI
TP10 LED1IN
TP11 CLK/TXEN/200MA
TP13 TXEN
TP14 DO
TP15 LO
TP16 IRQB/OCB
TP17 SPI/PIN
TP19 TX
TP20 DI
TP21 WUB
TP22 SDO/RX/THSH
TP23 SDI/TX/NPN

D7 D3 D4 D6 D9

MBED CONNECTION

P2 SSQ-108-23-G-S
NC
IOREF
NRST
+3V3
+5V
GND
GND
VIN

P1 SSQ-110-23-G-S
UARTSEL MICRO
LED MICRO
CLK/TXEN
SDO/RX/THSH
SDI/TX
CSB
LO
LI
D15 D14 AVDD GND SCLK MISO MOSI D10 D9 D8

P3 SSQ-108-23-G-S
RX
TXEN
WUB
IRQB/OCB
TX
D7 D6 D5 D4 D3 D2 TX RX

P4 SSW-106-03-T-S
A0 A1 A2 A3 A4 A5

SW2 A6T-1104
SPI/PIN
R8 1K
R12 10K
R13 0
R14 0
SDI/TX
SDO/RX/THSH

PROTECTION DIODES

D1 SPT02-236DDB
D8 SPT02-236DDB
D2 SPT01-335DEE

PIN-MODE CONTROLS

R10 100
R15 10K
R11 100
R16 10K
R9 100
R17 10K

Mouser Electronics

Authorized Distributor

Click to View Pricing, Inventory, Delivery & Lifecycle Information:

Maxim Integrated:

MAX14827EVKIT#